Cablerein

Product Specification

Code: FB2P

SPECIFICATION	
LID SIZE:	266 x 176 mm
LID STYLE:	Polyamide grey 7mm Rebated
LID MATERIAL:	Polymide floorboxes
BOX SIZE:	240 x 150 x 110 mm Deep
BOX MATERIAL:	Powder coated steel
CAPACITY (POWER):	1 x Standard Double Socket Outlet
CAPACITY (DATA):	1 x Standard Double Data Plate
SUITABLE FOR:	Cat 6A & 7A cabling
SUPPLIED WITH:	1 x Standard Double Socket Outlet 1 x Standard Double Data Plate Temporary Construction Lid
FEATURES:	Robust floor box with reversible low profile lid. Large capacity cable exit flap with retracing handle. Modular box body and lid design, interchangeable with stainless and other lids in the floor box range.

FB2P Assembly

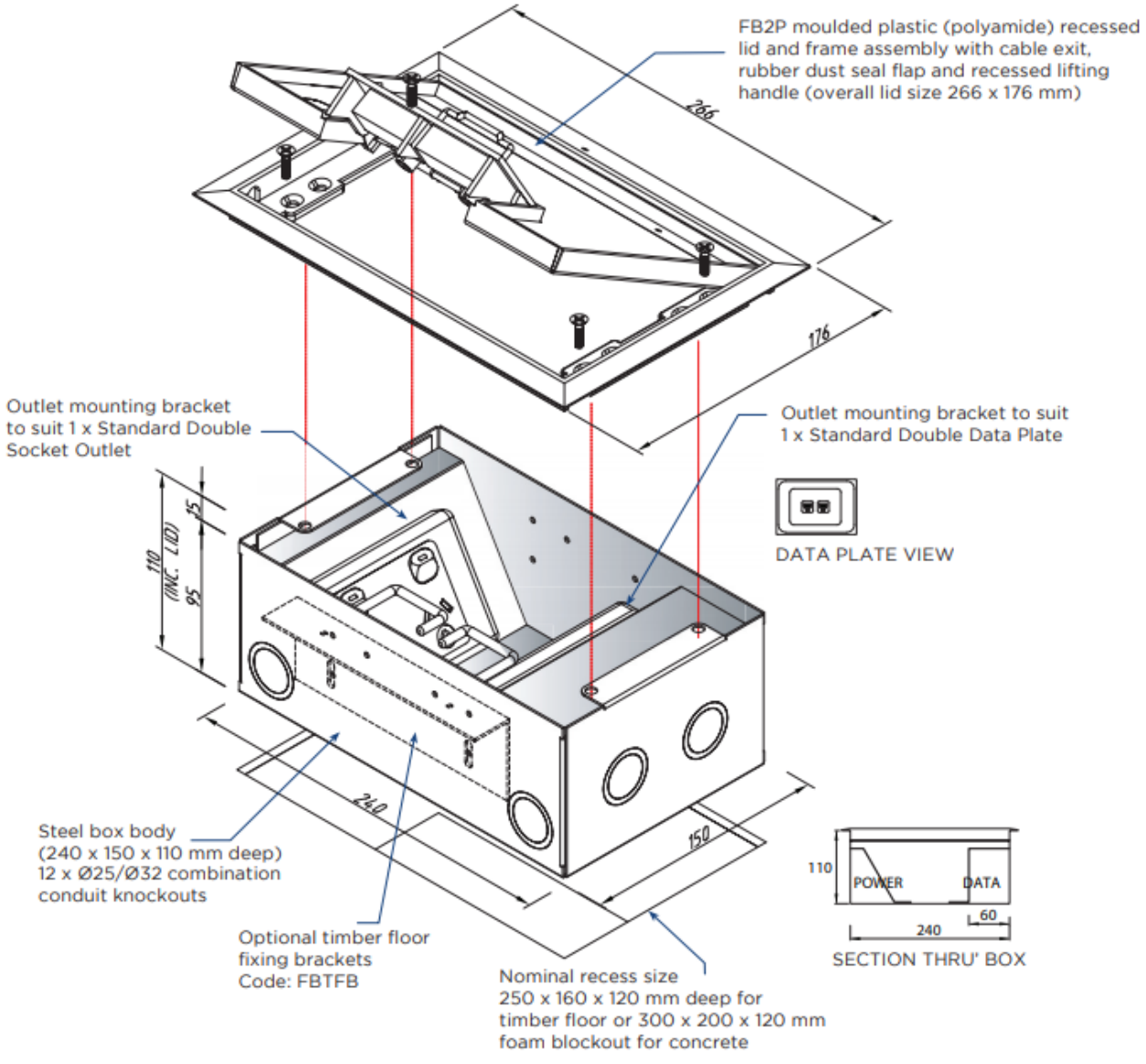

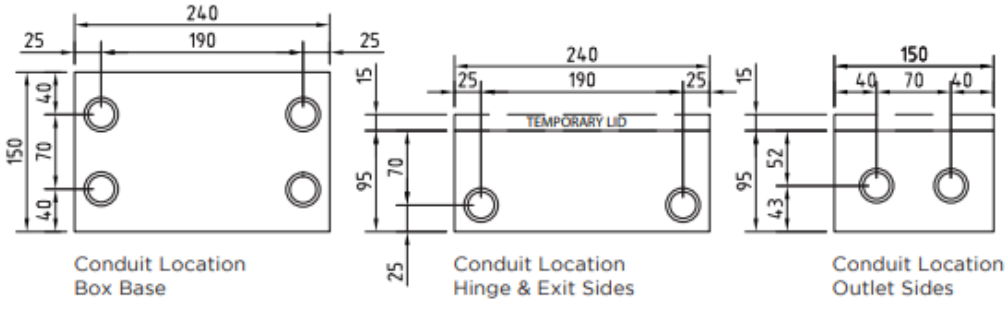

All dimension quoted are nominal only. Drawings, images and text are for illustrative purposes only and product details and dimensions are subject to change without notice.

This product is not suitable for use in wet areas. It is intended for use with fixed wiring only and must be installed according to the AS/NZ 3000 Wiring Rules.